Prob. 1: An aircraft tow bar is positioned by means of a single hydraulic cylinder connected by a 25-mm-diameter steel rod (CD) to two identical arm-and-wheel units DEF. The mass of the entire tow bar is 200 kg, and its center of gravity is located at G. For the position shown, determine the normal stress in the rod CD.

(**Ans:** $\sigma_{CD} = -4.97MPa$)

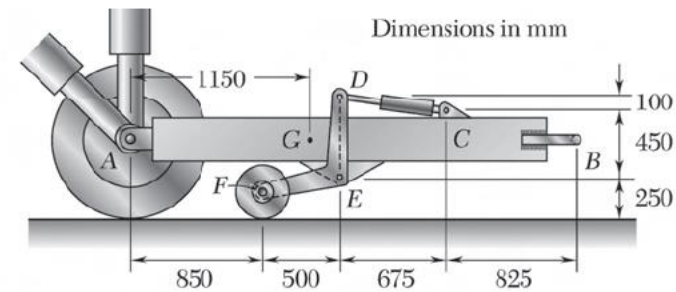

Prob. 2: In many situations physical constraints prevent strain from occurring in a given direction, for example $\varepsilon_z = 0$ in the case shown, where longitudinal movement of the long prism is prevented every point. Plane sections perpendicular to the longitudinal axis remain plane and the same distance apart. Show that for the this situation, which is known as *plane strain*, we can express σ_z, ε_x and ε_y as follows.

$$\sigma_z = \nu(\sigma_x + \sigma_y); \;\; \varepsilon_x = \frac{1}{E}\left[(1-\upsilon^2)\sigma_x - \upsilon(1+\upsilon)\sigma_y\right];$$

$$\varepsilon_y = \frac{1}{E}\left[(1-\upsilon^2)\sigma_y - \upsilon(1+\upsilon)\sigma_x\right]$$

Prob. 3: Members AB and CD are 30-mm diameter steel rods, and members BC and AD are 22-mm diameter steel rods. When the turnbuckle is tightened, the diagonal member AC is put in tension. Knowing that E= 200 GPa (for steel), determine the largest allowable tension in AC so that the deformations in the mebers AB and CD do not exceed 1.0 mm. (Ans: F_{AC}=147.3kN)

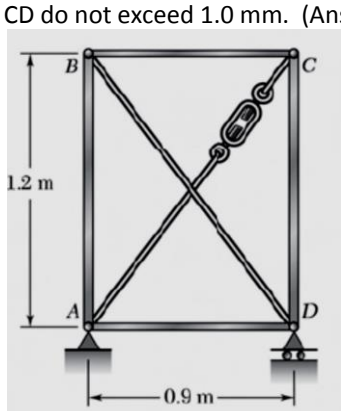

Prob. 4: The length of the assembly decreases by 0.15 mm when an axial force is applied by means of rigid end plates. Determine the magnitude of the applied force, (b) the corresponding stress in the steel core. (Ans: P=101.6 kN and $\sigma_S = 100MPa$)

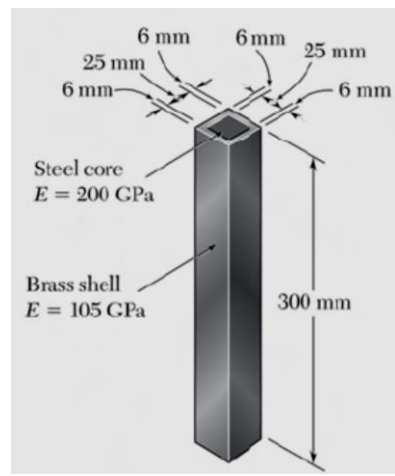

Prob. 5: Each of the four vertical links connecting the two horizontal members is made of aluminum (E = 70 GPa) and has a uniform rectangular cross-section of 10×40 mm. For the loading shown, determine the deflection of (a) point E, (b) point F and (c) point G. (Ans: $\delta_E = 80.4\ \mu m, \delta_F = 209\ \mu m, \delta_G = 390\ \mu m$)

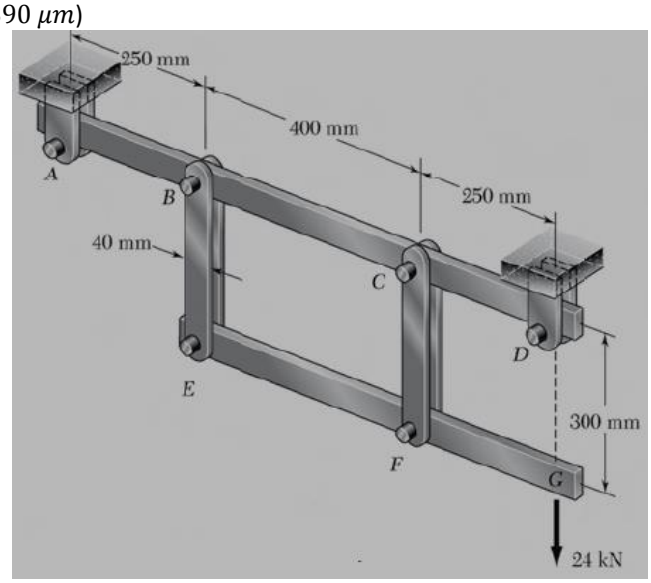

Prob. 6: A long retaining wall is braced by wood shores set at an angle of 30° and supported by concrete thrust blocks, as shown in the first part of the figure. The shores are evenly spaced, 3 m apart.

For analysis purposes, the wall and shores are idealized as shown in the second part of the figure. Note that the base of the wall and both ends of the shores are assumed to be pinned. The pressure of the soil against the wall is assumed to be triangularly distributed, and the resultant force acting on a 3-meter length of the wall is F = 190 kN.

If each shore has a 150 mm × 150 mm square cross section, what is the compressive stress σ_C in the shores?

(**Ans:** σ_C =5.21 MPa)

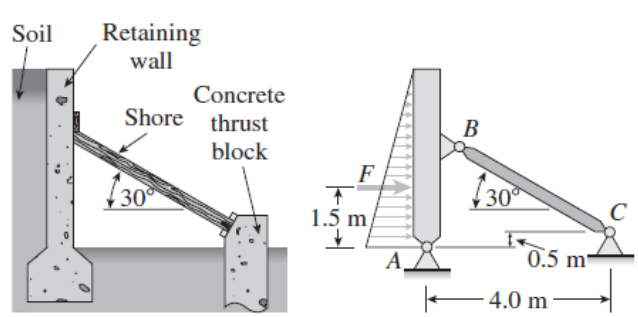

Prob. 7: A bronze bar is fastened between a steel bar and an aluminum bar as shown in figure. Axial loads are applied at the positions indicated. Find the largest value of P that will not exceed an overall deformation of 3.0 mm, or the following stresses: 140 MPa in the steel, 120 MPa in the bronze, and 80 MPa in the aluminium. Assume that the assembly is suitably braced to prevent buckling. Use E_{st} = 200 GPa, E_{al} = 70 GPa, and E_{br} = 83 GPa.

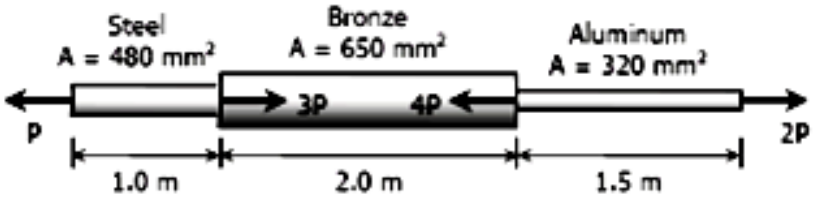

Prob. 8: A steel bar of length 2.5 m with a square cross section 100 mm on each side is subjected to an axial tensile force of 1300 kN (see figure). Assume that E=200 GPa and v=0.3. Determine the increase in volume of the bar.

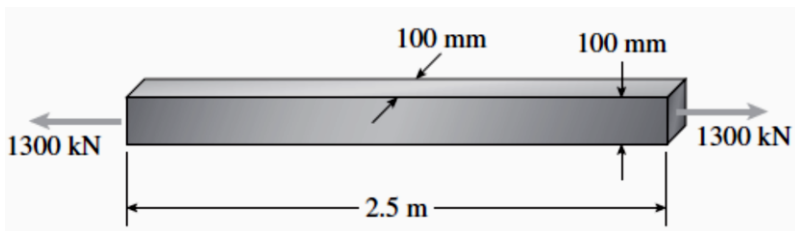

Prob. 9: Determine the dilatation *e* and the change in volume of the 200-mm length of the rod shown if (a) the rod is made of steel with *E*= 200 GPa and ν=0.30, (b) the rod is made of aluminium with *E*= 70 GPa and ν=0.35.

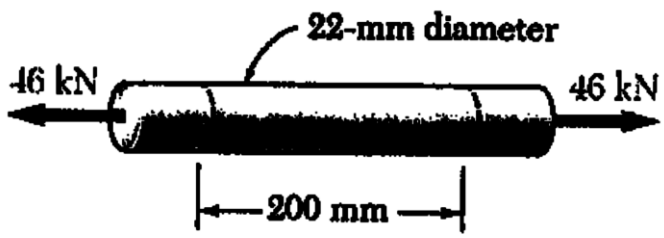
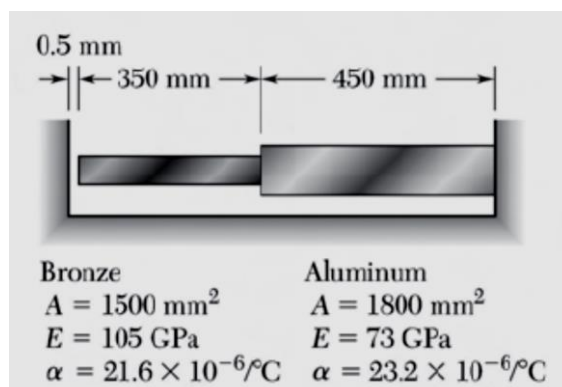
Prob. 10: Determine (a) the compressive force in the bars shown after a temperature rise of 82^{0}C, and (b) the corresponding change in length of the bronze bar. (Ans: P=172.8kN, $\delta = 0.236\ mm$)